Technical data sheet

Product features

Convection oven electric Direct steam Color touch screen Automatic cleaning Left-hinged door 5x GN 1/1 400 V / 3N

Model	SAP Code	00038581
MPDN 0511 ELAM	A group of articles - web	Convection machines



- Steam type: Injection
- Number of GN / EN: 5
- GN / EN size in device: GN 1/1, EN 600x400
- GN device depth: 65
- Control type: Touchscreen
- Display size: 7”
- Humidity control: Yes, indirect measuring
- Delta T heat preparation: Yes
- Multi level cooking: Drawer program - control of heat treatment for each dish separately
- Door constitution: Vented safety double glass, removable for easy cleaning

SAP Code	00038581	**Steam type**	Injection
Net Width [mm]	907	**Number of GN / EN**	5
Net Depth [mm]	752	**GN / EN size in device**	GN 1/1, EN 600x400
Net Height [mm]	643	**GN device depth**	65
Net Weight [kg]	65.00	**Control type**	Touchscreen
Power electric [kW]	6.300	**Display size**	7”
Loading	400 V / 3N - 50 Hz		

RM GASTRO, s.r.o.,
Třída Čs. armády 816,
391 81 Veselí nad Lužnicí 1, ID:49825062

Technical data sheet

Technical drawing

Convection oven electric Direct steam Color touch screen Automatic cleaning Left-hinged door 5x GN 1/1 400 V / 3N		
Model	**SAP Code**	00038581
MPDN 0511 ELAM	**A group of articles - web**	Convection machines

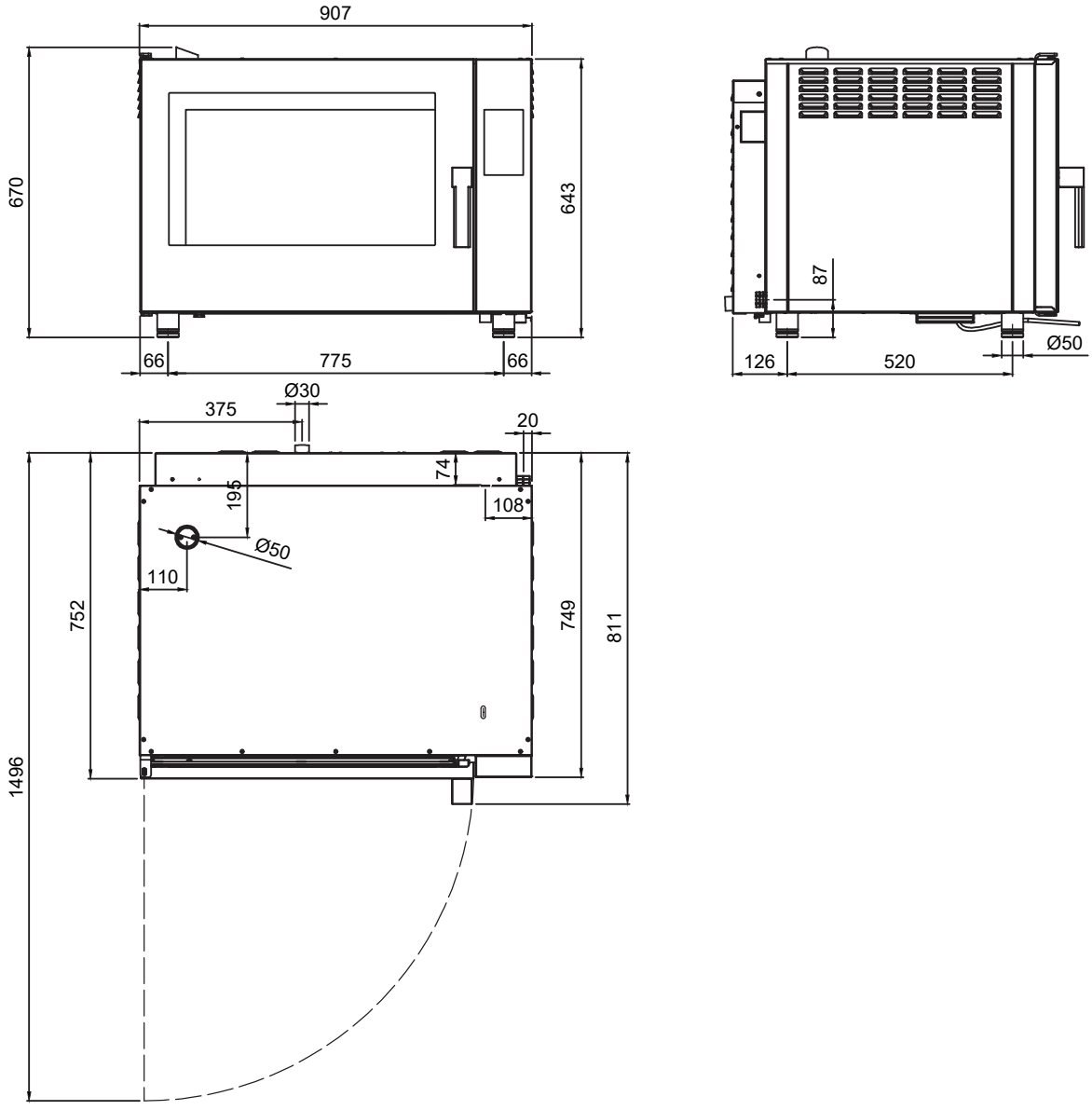

RM GASTRO, s.r.o.,
Třída Čs. armády 816,
391 81 Veselí nad Lužnicí 1, ID:49825062

Technical data sheet

Product benefits

Convection oven electric Direct steam Color touch screen Automatic cleaning Left-hinged door 5x GN 1/1 400 V / 3N

Model	SAP Code	00038581
MPDN 0511 ELAM	A group of articles - web	Convection machines

1 Rapid chamber ventilation system
fast ventilation of odors
- saving time and costs

2 Double glazed ventilation door (panels can be opened)
easy cleaning and washing
- easier human work and effort - more satisfied staff

3 LED cooking chamber lighting
overview inside the combi oven
- saving time and costs, when we do not open the convection oven, hot air does not escape

4 AISI 304 cooking chamber with curved corners
easy cleaning and washing
- easier human work and effort - more satisfied staff

5 Height adjustable feet
variability of operation
- possibility of height adjustment

6 Single knob control
simplicity
- saving time; easier human work and effort - more satisfied staff

7 Trolley
cooks and handles up to 20 GN at once
- low operating costs, saving time and costs

8 Preset cooking programs
possibility of controlling 9 cooking phases for each of them
- saving time and costs

9 One Touch cooking mode
immediate start of the cooking cycle “one touch of the program”
- saving time and costs

10 Easy service
possibility of cooking different dishes at the same time
- saving time and costs

11 Super Steam
possibility of setting 2 humidity levels
- tasty balanced meals

12 Hold function
possibility of maintaining food temperature, immediate serving
- saving time and costs

13 Regeneration function
food regeneration
- tasty and more valuable food, nice appearance of the food,

14 Rack control
possibility of serving all dishes at the same time in one place
- saving time and costs

RM GASTRO, s.r.o.,
Třída Čs. armády 816,
391 81 Veselí nad Lužnicí 1, ID:49825062

Technical data sheet

Technical parameters

Convection oven electric Direct steam Color touch screen Automatic cleaning Left-hinged door 5x GN 1/1 400 V / 3N

Model	SAP Code	00038581
MPDN 0511 ELAM	A group of articles - web	Convection machines

1. **SAP Code:**
   00038581
2. **Net Width [mm]:**
   907
3. **Net Depth [mm]:**
   752
4. **Net Height [mm]:**
   643
5. **Net Weight [kg]:**
   65.00
6. **Gross Width [mm]:**
   940
7. **Gross depth [mm]:**
   900
8. **Gross Height [mm]:**
   698
9. **Gross Weight [kg]:**
   75.00
10. **Device type:**
    Electric unit
11. **Power electric [kW]:**
    6.300
12. **Loading:**
    400 V / 3N - 50 Hz
13. **Material:**
    AISI 304
14. **Exterior color of the device:**
    Stainless steel
15. **Adjustable feet:**
    Yes
16. **Humidity control:**
    Yes, indirect measuring
17. **Stacking availability:**
    Yes
18. **Control type:**
    Touchscreen
19. **Additional information:**
    possibility of reverse door opening - handle on the right side (must be specified when ordering)
20. **Steam type:**
    Injection
21. **Chimney for moisture extraction:**
    Yes
22. **Display size:**
    7”
23. **Delta T heat preparation:**
    Yes
24. **Unified finishing of meals EasyService:**
    Yes
25. **Night cooking:**
    Yes
26. **Washing system:**
    Open
27. **Detergent type:**
    Liquid washing detergent + water rinse
42. **Low temperature heat treatment:**
    Yes

RM GASTRO, s.r.o.,
Třída Čs. armády 816,
391 81 Veselí nad Lužnicí 1, ID:49825062

Technical data sheet

Technical parameters

Convection oven electric Direct steam Color touch screen Automatic cleaning Left-hinged door 5x GN 1/1 400 V / 3N

Model	SAP Code	00038581
MPDN 0511 ELAM	A group of articles - web	Convection machines

28. Multi level cooking:
Drawer program - control of heat treatment for each dish separately

29. Slow cooking:
from 50 °C

30. Fan stop:
Interruption when door is opened, not braked

31. Lighting type:
LED lighting in the door, on one side

32. Cavity material and shape:
AISI 304, with rounded corners for easy cleaning

33. Reversible fan:
Yes

34. Sustaince box:
Yes

35. Standard equipment for device:
1-point probe

36. Heating element material:
Incoloy

37. Probe:
Yes

38. Shower:
Manual (optional)

39. Distance between the layers [mm]:
74

40. Smoke-dry function:
Yes

41. Interior lighting:
Yes

43. Number of fan speeds:
3

44. Number of programs:
1000

45. USB port:
Yes, for uploading recipes and updating firmware

46. Door constitution:
Vented safety double glass, removable for easy cleaning

47. Number of preset programs:
100

48. Number of recipe steps:
9

49. Minimum device temperature [°C]:
50

50. Maximum device temperature [°C]:
300

51. Device heating type:
Combination of steam and hot air

52. HACCP:
Yes

53. Number of GN / EN:
5

54. GN / EN size in device:
GN 1/1, EN 600x400

55. GN device depth:
65

56. Cross-section of conductors CU [mm²]:
1

RM GASTRO, s.r.o.,
Třída Čs. armády 816,
391 81 Veselí nad Lužnicí 1, ID:49825062

Technical data sheet

Technical parameters

Convection oven electric Direct steam Color touch screen Automatic cleaning Left-hinged door 5x GN 1/1 400 V / 3N		
Model	**SAP Code**	00038581
MPDN 0511 ELAM	**A group of articles - web**	Convection machines

57. Diameter nominal:
DN 50

58. Water supply connection:
3/4”

RM GASTRO, s.r.o.,
Třída Čs. armády 816,
391 81 Veselí nad Lužnicí 1, ID:49825062